Population, Unemployment and Poverty: A Population Analysis in East Java Indonesia

by Sayekti Suindyah

Submission date: 31-Aug-2020 02:45PM (UTC+0700)
Submission ID: 1376828666
File name: Artikel_Prosiding_SU-AFBE_2018.pdf (456K)
Word count: 3394
Character count: 17818

Population, Unemployment and Poverty: A Population Analysis in East Java Indonesia

Sayekti Suindyah Dwiningwarni[1], Aslichah[2], Anto Ariyanto[3], Titin[4], and Muhammad Yusuf [5]
Faculty of Economics, Darul 'Ulum University, Gus Dur 29 A Street, Jombang, Indonesia[1,2]
Faculty of Agriculture, Lancang Kuning University, Yos Sudarso KM 8 Rumbai Street, Pekanbaru Indonesia[3],
Faculty of Economics, Lamongan Islamic University, Veteran 53 A Street, Lamongan, Indonesia[4]
Faculty of Technichal, Institute of Sains & Technology Industry AKPRIND, Kalisahak 28 Street Kompleks Balapan, Yogyakarta, Indonesia[5]

sayekti.fps@undar.ac.id[1], aslichah.em@undar.ac.id[2], antoariyanto@unilak.ac.id[3], titinunisla543@gmail.com[4], 5yusuf@akprind.ac.id[5]

Abstract. The aim of this study was to analyze (1) the influence of Population Growth Rate, Economic Growth, Inflation and Investment Rate on Open Unemployment Rate, (2) the effect of Population Growth Rate, Economic Growth, Inflation Rate, Investment on poverty level indirectly through Open Unemployment Rate. The analysis used is path analysis. The results of the study (1) The rate of population growth has a negative and significant effect on economic growth; (2) Economic growth has a positive and significant effect on the inflation rate; (3) The level of inflation has a negative and significant effect on investment; (4) The rate of population growth has a negative and significant effect on the Open Unemployment Rate; (5) Economic growth has a negative and significant effect on the Open Unemployment Rate; (6) Inflation rate has a positive and significant effect on the Open Unemployment Rate; (7) Investment has a positive and significant effect on the Open Unemployment Rate; (8) The number of Open Unemployment has a positive and significant effect on the Poverty Level.

Keywords: Rate of Population Growth, Economic Growth, Rate of Inflation, Investment, Unemployment, Poverty.

1. Introduction

Indonesia's economic growth in general and especially East Java Province is influenced by several factors including investment and labor factors. Research on economics generally states that poverty reduction is closely related to economic growth. Basically, economic growth is the main requirement in alleviating poverty, and the second is that economic growth is pro-poor [1]; [2].

Development of an area can be seen from the level of economic growth in the region, income and level of welfare of the population of the area. The amount of unemployment in an area is a factor that indicates that the regional economic growth is not good [3]. One important indicator in economic growth is population growth. The greater the population, the more labor

SU-AFBE 2018, December 06, Jakarta, Indonesia
Copyright © 2019 EAI
DOI 10.4108/eai.6-12-2018.2286278

is used. With the increasing population, it will also increase population problems that must be faced by a country or region [3].

The main problem that must be faced by a country or region that experiences rapid population growth is to increase the number of unemployed. Unemployment occurs because the labor force is more than the demand for labor [4]. The long-run elasticity and Granger causality were investigated under framework of VECM [5]. The result suggested a positive and statistically significant impact of energy consumption and population growth on unemployment. The Granger causality result suggested bidirectional causality between unemployment and FDI, and population and energy use. The study suggested some policy implications based on our empirical result [5].

Many reasons have been attributed as to why population growth is on the rise and how it proportionately affect unemployment. The major reason for a rise in population include increase in birth rate, socio-culture beliefs and improvement in welfare and medical facilities [6], [7]. Although the positive effects of population cannot be overlooked, it is also important to note that its negative effects highly outweigh its positives. When there is high population, the country tends to exceed its carrying capacity, which means that the country can no longer support its large population in term of resources as well as job opportunities [6]. The problem of unemployment is very alarming and demands urgent attention and solutions as its effects are very severe. Some of effect include; increasing in income inequality, rise in criminal activities like Boko-Haramand decline in the general standard of living [6].

Economic growth has a very small influence on the level of poverty directly [2]. This condition causes unemployment to arise. The problem of unemployment is very disturbing and requires important attention in the demand and the solutions that influence it. Some of the influences include: increasing income inequality, the emergence of criminal acts such as Booko-Haram, and decreasing living standards in general [6]. Poverty is a serious problem faced by countries in the world today. The number of poor people in Indonesia in 2007 in urban areas was 12.57% and in rural areas 20.37% [8]. Therefore, poverty is the main agenda in development in each country [9].

In Indonesia, the agricultural sector has an important role in reducing poverty compared to urban areas. The agricultural sector remains the key and the leading sector in reducing poverty in the aggregate, because the greatest poverty is in rural areas [10]. Poverty can also be linked to income distribution, substitution of effects, trade-offs [11]. Urban poverty reduction can be done through industrial sector empowerment, while in rural areas through the agricultural sector [10]. Another strategy in poverty alleviation is through the existence of the labor market implicitly, but also in general [12].

There is a close relationship between economic growth, population growth, inflation, investment and unemployment to the poverty rate in the world. The development of the Human Development Index (HDI) has increased with the medium HDI category during the period 2006-2009 in Central Java. Poverty has a negative influence on HDI, economic growth and capital expenditure have a positive effect on IPM [13].

This study attempts to analyze (1) the influence of population growth, economic growth, inflation and investment rates on open unemployment in East Java, (2) the influence of population growth, economic growth, inflation, investment and poverty levels through the rate of open unemployment in Java East.

2. Method

The data used in this study is secondary and the data analysis method used is path analysis, because this study focuses on the effect of population growth rates and

unemployment rates on poverty levels. The conceptual framework of this study is shown in figure 1 below:

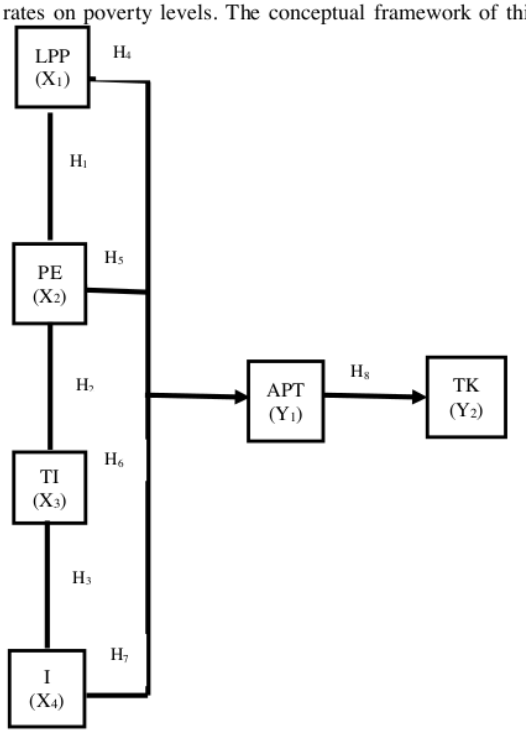

Fig. 1. Conceptual Framework.

Caption:

LPP (X1): Population Growth Rate; PE (X2): Economic Growth; TI (X3): Inflation rate; I (X4): Investment; APT (Y1): Open Unemployment Rate; TK (Y2): Poverty Level.

Based on Figure 1, the purpose of this study is to analyze: 1. the influence of LPP, PE, TI and I on APT; 2. the influence of APT on TK; The path analysis modeling formula is as follows:

1. $X2 = \beta 1X1$ (1)
2. $X3 = \beta 2X2$ (2)
3. $X4 = \beta 3X3$ (3)
4. $Y1 = \beta 4\mathrm{X}1$ (4)
5. $Y1 = \beta 5\mathrm{X}2$ (5)
6. $Y1 = \beta 6\mathrm{X}3$ (6)
7. $Y1 = \beta 7\mathrm{X}4$ (7)
8. $Y1 = \beta 8X1 + \beta 9X2 + \beta 10X3 + \beta 11X4$ (8)
9. $Y2 = \beta 12Y1$ (9)

Hypothesis:

1. It is suspected that there is a positive and significant influence between the Population Growth Rate and Economic Growth.
2. It is suspected that there is a positive and significant influence between Economic Growth and Inflation Rate.
3. It is suspected that there is a positive and significant influence between the Inflation and Investment Levels.
4. It is assumed that there is a positive and significant influence between the Population Growth Rate and the Open Unemployment Rate,
5. It is suspected that there is a positive and significant influence between Economic Growth and the Open Unemployment Rate,
6. It is suspected that there is a positive and significant influence between the Inflation Rate and the Open Unemployment Rate,
7. It is suspected that there is a positive and significant influence between the Inflation Rate and the Open Unemployment Rate,
8. It is suspected that there is a positive and significant influence between the Open Unemployment Rate and the Poverty Level.

3. Result

The results of testing the linearity assumption of path analysis for Figure 1 are shown in Table 1 below:

Table 1. Testing of linearity assumptions.

Independent Variable	Dependent Variable	Test Result (α=0.05)	Inform
LPP (X1)	PE (X2)	Semua model signifikan	Linear
PE (X2)	TI (X3)	Semua model signifikan	Linear
TI (X3)	I (X4)	Semua model signifikan	Linear
LPP (X1)	APT (Y1)	Semua model signifikan	Linear
PE (X2)	APT (Y1)	Semua model signifikan	Linear
TI (X3)	APT (Y1)	Semua model signifikan	Linear
I (X4)	APT (Y1)	Semua model signifikan	Linear
APT (Y1)	TK (Y2)	Semua model signifikan	Linear

Source: Secondary Data and Processed

Table 1 shows that all forms of relationships between the independent and dependent variables contained in the structural model are linear. Thus the assumption of linearity in the path analysis is fulfilled.

Based on the results of path analysis calculations, two indicators are used to determine the validity of the model, namely: 1. The total coefficient of determination shows the R2 value of 0.9370 or 93.70% of the diversity of data can be explained by the model and the remaining

6.30% by other variables not in the model. The result of theory triming, the paths that are significant are discarded so that the model is supported by empirical data with the that the model is supported by empirical data with the results shown in Figure 2 below.

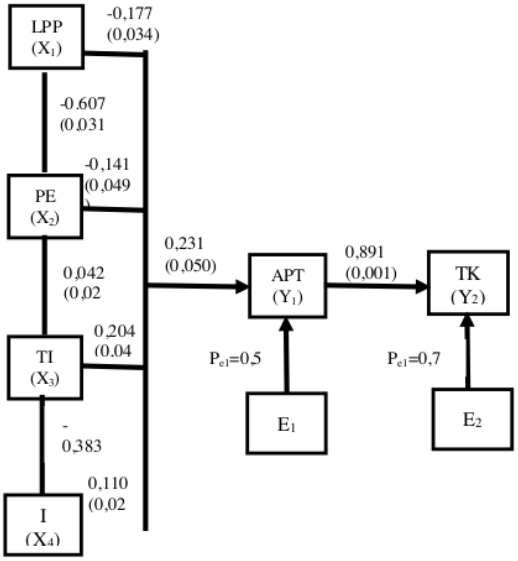

Fig. 2. Path Analysis.

Figure 2 shows that of the six variables used in this study it turns out that all variables have a significant effect. This means that by using path analysis that the problem of population, unemployment and poverty in East Java can provide evidence of the influence both directly and indirectly.

Figure 2 also explains that of the 9 hypotheses proposed in this study, all were accepted. The accepted hypothesis is indicated by a path that has a coefficient number of 0.05.

Hypothesis testing is done by using the t test (t test) partially to the coefficient of direct influence. T test is used, want to know the effect of each independent variable in the form of Population Growth Rate (X1), Economic Growth (X2), Inflation Rate (X3), Investment (X4) and Open Unemployment Rate (Y1) on Poverty Rate (Y2). The results of the research hypothesis testing are shown in Table 2 below:

Table 2. Path Coefficient and Hypothesis Testing Results

Independent Variable	Dependent Variable	Path Koef	P value	Information
Population Growth Rate	Economic growth	-0.607	0,031	Significant
Economic growth	Inflation rate	0,042	0,023	Significant
Inflation rate	Invesment	-0,383	0,045	Significant

Population Growth Rate	Open Unemployment Rate	-0,177	0,034	Significant
Economic growth	Open Unemployment Rate	-0,141	0,049	Significant
Inflation rate	Open Unemployment Rate	0,204	0,041	Significant
Invesment	Open Unemployment Rate	0,110	0,027	Significant
Open Unemployment Rate	Poverty level	0,891	0,001	Significant

Based on the results of path analysis as listed in Table 2, the results of hypothesis testing are obtained as follows:

1. The rate of population growth has a negative and significant effect on economic growth, with a coefficient value of -0.607 and a value of p = 0.031. This means rejecting hypothesis 1 which states that the rate of population growth has a positive and significant effect on economic growth.
2. Economic growth has a positive and significant effect on the inflation rate, with a coefficient of 0.042 and a value of p = 0.023. This means accepting hypothesis 2 which states that Economic Growth has a positive and significant effect on the Inflation Rate.
3. Inflation rate has a negative and significant effect on investment, with a coefficient value of -0.338 and a value of p = 0.045. This means that rejecting hypothesis 3 states that the inflation rate has a positive and significant effect on investment.
4. The rate of population growth has a negative and significant effect on the Open Unemployment Rate, with a coefficient value of -0.177 and a value of p = 0.034. This means rejecting hypothesis 4 which states that the rate of population growth has a positive and significant effect on the Open Unemployment Rate.
5. Economic growth has a negative and significant effect on the Open Unemployment Rate, with a coefficient value of -0.141 and p value = 0.049. This means that rejecting hypothesis 5 states that Economic Growth has a positive and significant effect on the Open Unemployment Rate.
6. Inflation r. of 0.204 and a value of p = 0.041. This means that accepting hypothesis 6 which states that the Inflation Rate has a positive and significant effect on the Open Unemployment Rate
7. Investment has a positive and significant effect on the Open Unemployment Rate, with a coefficient value of 0.110 and a value of p = 0.027. This means accepting hypothesis 7 which states that investment has a positive and significant effect on the Open Unemployment Rate.
8. The Open Unemployment Rate has a positive and significant effect on the Poverty Level, with a coefficient of 0.891 and a value of p = 0.001. This means that accepting hypothesis

8 which states the Open Unemployment Rate has a positive and significant effect on the Poverty Level.

4. Discussion

The results of the study are as follows:

1. The population growth rate has a negative and significant effect on economic growth. The results of this study are not agree with the research [3], [5], [14], [15].
2. Economic growth has an effect on the inflation rate positively and significantly. The results of this study are agree with the research [13], [6]
3. Inflation rate has a negative and significant effect on investment. The results of this study are agree with the research [1], [2], [4]
4. The rate of population growth has a negative and significant effect on the unemployment rate (APT). The results of this study are agree with the research [4], [16].
5. Economic growth has a negative and significant effect on APT. The results of this study are agree with the research [5], [6], [17].
6. Inflation rate has a positive and significant effect on APT. The results of this study are agree with the research [13].
7. Investment has a positive and significant effect on APT. The results of this study are agree with the research [2], [4], [5].
8. Population Growth Rate, Economic Growth, Inflation Rate and Investment positively and significantly affect APT. The results of the study are agree with the research [1], [3], [6], [18], [19]
9. APT has a positive and significant effect on the Poverty Rate (TK). The results of this study are agree with the research [2], [6], [11], [12].

From the results of path analysis it can be concluded that the variables LPP, PE, TI, have a significant effect on APT, this means that in East Java there can be no problems with the increase in population, because increasing population will cause a reduction in open unemployment and this influence significant. The most important research result is the number of Open Unemployment has a positive and significant effect on the level of poverty.

This indicates that if the APT continues to increase each year, the poverty rate will continue to increase every year. This is what should be the main concern of the East Java Provincial Government. The policies issued by the East Java Provincial Government should be directly related to the reduction of open unemployment rates. One of the causes of increasing APT from year to year is the number of elementary, junior high, high school and PT graduates who have not worked, not to mention the termination of employment and work systems that use the contract system.

5. Conclusion

Population Growth Rate, Economic Growth, Inflation and Investment Levels directly significantly influence the Open Unemployment Rate (APT) and indirectly have a significant effect on the Poverty Rate (TK). Although the Population Growth Rate and Economic Growth negatively affect the Open Unemployment Rate. This indicates that the conditions of population, economic growth and employment in East Java in particular and in Indonesia are generally stable. This is evidenced by the results of research by other researchers [2], [13], [16], [17]. Whereas the Open Unemployment Rate directly has a significant effect on the Poverty Level, this condition generally applies in accordance with the prevailing theory that the unemployment rate will affect the poverty level [1], [15], [7].

The results of this study recommend to the government of East Java Province in particular and Indonesia in general (1) so as not only to pay attention to the rate of population growth, economic growth and open unemployment, but also to improve programs and controls on population growth, economic growth, inflation, investment problems of unemployment and poverty. (2) in policy making must be in favor of policies relating to employment (work system), abolition of the contract system, employment / business, and prices of basic necessities.

The limitation of this study is that this study 1) was only carried out in one province in Indonesia, 2) using time series secondary data which are not panel data, 3) time series data used for only 10 years.

Acknowledgements

Thank you to Dr. H. Anton Muhibuddin, MP who has given and guided writers to always conduct research and write scientific articles and send them to national and international journals. Thank you also to Mr. Dr. H.M. Mujib Musta'in, SH., M.Si, as Chancellor of Darul 'Ulum Jombang University.

References

[1] A. Kraay, "When is growth pro-poor? Evidence from a panel of countries," *J. Dev. Econ.*, vol. 80, no. 1, pp. 198–227, 2006.

[2] C. Nizar, A. Hamzah, and S. Syahnur, "Pengaruh Investasi Dan Tenaga Kerja Terhadap Pertumbuhan Ekonomi Serta Hubungannya Terhadap Tingkat Kemiskinan Di Indonesia," *J. Ilmu Ekon.*, vol. 1, no. 2, pp. 1–8, 2013.

[3] A. Zulfa, "Pengaruh Pertumbuhan Penduduk dan Pertumbuhan Ekonomi terhadap Tingkat Pengangguran di Kota Lhokseumawe," *VISIONER Strateg.*, vol. 5, no. 1, pp. 13–22, 2016.

[4] SS Dwiningwarni, "Pengaruh Investasl, Tenaga Kerja Dan Pengeluaran Pemerintah Terhadap Pertumbuhan Ekonomi Di Provinsi Jawa Timur," *EKUITAS*, vol. 15, no. 4, pp. 144–500, 2011.

[5] M. Sadikova, F. Faisal, and N. G. Resatoglu, "Influence of energy use , foreign direct investment and population growth on unemployment for Russian Federation," *Procedia Comput. Sci.*, vol. 120, pp. 706–711, 2018.

[6] H. E. Gideon, "Impact Of Population Growth On Unemployement In Nigeria," American University of Nigeria, Nigeria, 2016.

[7] E. W. F. Peterson, "The role of population in economic growth," *SAGE Open*, vol. 7, no. 4, 2017.

[8] B.P.S., "Jumlah Penduduk Miskin, Persentase Kemiskinan dan Garis Kemiskinan di Indonesia tahun 1970-2017." pp. 1–5.

[9] E. Latifah, "Harmonisasi Kebijakan Pengentasan Kemiskinan di Indonesia Yang Berorientasi Pada Millennium Development Goals," *Din. Huk.*, vol. 11, no. 3, pp. 403–413.

[10] I. Hermawan, "Analisis Eksistensi Sektor Pertanian terhadap Pengurangan Kemiskinan di Pedesaan dan Perkotaan," *J. Mimb.*, vol. 28, no. 2, pp. 135–144.

[11] C. Webster, F. Wu, F. Zhang, and C. Sarkar, "Informality, property rights, and poverty in China's 'favelas,'" *World Dev.*, vol. 78, pp. 461–476, 2016.

[12] E. Herman and M. A. Georgescu, "Employment Strategy for Poverty Reduction. A Romanian Perspective," *Procedia - Soc. Behav. Sci.*, vol. 58, no. 2006, pp. 406–415, 2012.

[13] D. S. Mirza, "Pengaruh Kemiskinan, Pertumbuhan Ekonomi, dan Belanja Modal terhadap Indeks Pembangunan Manusia Di Jawa Tengah," *Jejak*, vol. 4, no. 3, pp. 276–284, 2015.

[14] A. H. O, E. Chisom, and N. I. M, "Population and Economic Growth in Nigeria : is there an Empirical Evidence of Population and Economic Growth in Nigeria : is there an Empirical Evidence of Causality ?," no. March 2017, 2016.

[15] D. Mulok, R. Asid, M. Kogid, and J. Lily, "Economic Growth and Population Growth : Empirical Testing Using Malaysian Data," *Interdiscip. J. Res. Bus.*, vol. 1, no. 5, pp. 17–24, 2011.

[16] D. Putri and W. Subroto, "Analisis Beberapa Faktor yang Mempengaruhi Tingkat Pengangguran Terbuka di Jawa Timur Tahun 2003-2014," pp. 1–8, 2014.

[17] Isti Qomariyah, Dhiah Fitriyati, "Pengaruh Tingkat Inflasi Dan Pertumbuhan Ekonomi Terhadap Tingkat Pengangguran Di Jawa Timur," *J. Pendidik. Ekon.*, vol. 1, no. 3, 2013.

[18] I. Kiaušienė, "Comparative assessment of women unemployment and poverty in European Union," *Intellect. Econ.*, vol. 9, no. 2, pp. 91–101, 2015.

[19] S. S. Dwiningwarni, "Analisis Kunjungan Wisatawan Dan Dampaknya Terhadap Unsur Utama Industi Pariwisata Dan Penyerapan Tenaga Kerja Di Provinsi Jawa Timur," Airlangga Surabaya, 2007.

Population, Unemployment and Poverty: A Population Analysis in East Java Indonesia

ORIGINALITY REPORT

15%	15%	11%	13%
SIMILARITY INDEX	INTERNET SOURCES	PUBLICATIONS	STUDENT PAPERS

PRIMARY SOURCES

1	www.projectslib.com Internet Source	4%
2	Setya Murda Mustofa, Arifin Sitio. "ANALYTIC OF BRAND IMAGE, COMPANY IMAGE, AND PRICE ON PURCHASING DECISIONS AND THEIR IMPLICATIONS ON CUSTOMER SATISFACTION OF MEDICAL DEVICES PRODUCTS IN JABODETABEK AT PT. MDT", International Journal of Engineering Technologies and Management Research, 2020 Publication	4%
3	Mokhamad Surianto, Sulaeman Rahman Nidar, Sylviana Maya Damayanti. "The analysis of factors affecting land value and testing the accuracy of land value zone: case study in Blora, Indonesia", International Journal of Sustainable Real Estate and Construction Economics, 2019 Publication	2%

d-nb.info

4	Internet Source	2%
5	Submitted to Udayana University Student Paper	2%
6	isiarticles.com Internet Source	2%

Exclude quotes	Off	Exclude matches	< 2%
Exclude bibliography	Off		